Pilot laboratory approved by the French Ministry of the Interior (amended Decree of 5 February 1959)

Laboratory assessment No. DSSF21-07935/B

Concerning hardware elements

This laboratory assessment attests only the characteristics of the item tested and does not prejudge the characteristics of similar products. Therefore, it does not constitute a product certification in the sense of the French Consumer Code. Only the electronic report signed with a valid digital certificate is considered to be authentic in case of dispute. This electronic report is kept at CSTB for at least 10 years. Copying of this electronic report is only allowed in its full form. **It comprises 18 pages including appendix pages.**

Our Ref.: 21-07935 – AM/JP/AC

AT THE REQUEST OF:

CDVI

31 Avenue Du Général Leclerc

93500 PANTIN (France)

Déborah ADLER
Traductrice - Interprète
Expert près la Cour d'appel de Lyon
Français - Portugais – Italien
deborah.adler@orange.fr

CSTB
le futur en construction

Laboratory assessment No. DSSF21-07935/B

CONTEXT:

This Laboratory Assessment is intended to establish recognition of the fire resistance test reports issued by CSTB in accordance with the provisions of Article 10 of the Decree of 22 March 2004 amended by the Decree of 14 March 2011 of the French Ministry of the Interior.

This study concerns hardware elements manufactured by ***CDVI.***

For this purpose, the test reports mentioned in § "Type of study" have for objective to ensure that the fire resistance performance is reached according to the operating configurations and this, regardless of whatever implementation variant and/or finishings have been chosen. These configurations, such as laid out in the test reports, have been established based on joint feedback on the fire behaviour of the designs and on the analysis of all the supporting documents.

This study is established based on the file presented by the requestor.

PURPOSE

Fire resistance study concerning hardware elements.

REFERENCE TEXTS

The study was conducted in accordance with the provisions of the texts hereinbelow:

Type of text	Reference (No.)	Date	Title
Regulatory	Decree of 22/03/2004	2004:03	Decree of 22 March 2004 amended pertaining to the fire resistance of products, building and structure elements.

TYPE OF STUDY

Determination of the meeting of the performance criteria of Article 3 of the amended Decree of 22 March 2004.

Determination of the meeting of the fire resistance performance criteria in terms of the articles of the aforementioned decree is based on the following test reports:

Table 1: List of fire resistance test reports available (provided by the sponsor)

Body that carried out the tests	Name of the sponsor	Reference No. of the report	Date test performed	Method (Reference standards)
CSTB	CDVI	DSSF21-03605	26/05/2021	EN 1634-1 + A1:2018-03

OBJECT SUBMITTED FOR STUDY

Material presented by : CDVI

Trademark / Identification : **Hardware:**

- **Ball contacts:** BALLCONTACT / RB34
- **Electromagnetic suction cups**: C3S11 / C5S11

Manufacturer : CDVI

Origin : Bury Plant (60, France)

Test date : 19/01/2022

Déborah ADLER
Traductrice Interprète
Expertise Judiciaire Cour d'appel de Lyon
Français – Anglais – Italien
deborah.adler@orange.fr

CSTB
le futur en construction

Laboratory assessment No. DSSF21-07935/B

Issued at Marne-la-Vallée, France, 19/01/2022	Report approved by: Mr José PESTANA The Technical Advisor
Document prepared by: Anthony MALARA Document modified by: -	

1 Description of the element

NOTE: ***The dimensions are given in [mm]***. | *The plans of the building element, the subject of this report, are those provided by the sponsor* |

Iconographic key:

⌕ Hypertext links to the corresponding appendices	⚠ Critical point: See § Opinion and Interpretation

1.1 Principle of the unit

This is a set of hardware elements attached as an overlay on a wooden door unit mounted in a metal frame partition and plasterboard cladding.

The technical characteristics of the various hardware elements are described in the nomenclature table in § 1.1.1 of this laboratory assessment.

General drawing of the elements ⇨ See the appendix section > ⌕

NOTE. *In accordance with the CGP (General Terms of Service Provision), the information pertaining to the description of the products or of the building element and the data identified by (*) are provided by the requestor and fall under its full responsibility.*

1.1.1 Nomenclature of the components (established from the indications of the manufacturer)

DESIGNATION	REFERENCE	MATERIALS	CHARACTERISTICS	SUPPLIER	Test
☛ Ball contact					
Ball contact	BALLCONTACT	Stainless steel	Dimensions of the faceplate: 42 x 23 x 3 (L x W x th) Oblong mortise of the faceplate: 43 x 24 x 3.5 (L x W x H) Dimensions of the body: Ø 18 x 29 Mortise of the body: Ø 21 + shoulder of Ø 23 x 5 (Ø x h) Mounting: 2 Ø 3.5 x 20 screws	CDVI	

Déborah ADLER
Traductrice-Interprète
Experte par la Cour d'Appel de Lyon
Français – Anglais – Italien
deborah.adler@orange.fr

CSTB
le futur en construction

Laboratory assessment No. DSSF21-07935/B

DESIGNATION	REFERENCE	MATERIALS	CHARACTERISTICS	SUPPLIER	Test
Ball contact	RB34C	Plastic	Dimensions of the faceplate: 44 x 25 x 1.5 (L x W x th) Oblong mortise of the faceplate: 45 x 26 x 2 (L x W x H) Dimensions of the body: Ø 19.2 x 22 Mortise of the body: Ø21 Mounting: 2 Ø 3.5 x 20 screws	CDVI	
☛ Electromagnetic suction cups (Assembly on the side opposite the opening of the door unit) *The suction cup is fastened to the frame and the plywood is fastened to the leaf, on the side opposite the opening of the door unit, facing the suction cup.*					
C3S11 suction cup					
Suction cup	C3S11	Aluminium Alloy PVC	Dimensions of the suction cup: 248 x 45 x 26 (L x h x th) Fastening of the suction cup: 2 M6 x 30 screws *Fastened to the assembly plate*	CDVI	
Assembly plate		Aluminium	Dimensions of the support plate: 265 x 40 x 6 (L x W x th) Fastening of the assembly plate: 6 Ø 4 x 30 screws		
Plywood		Steel	Dimensions of the plywood: 185 x 38 x 11 (L x h x th) Fastening of the plywood: 1 M8 x 35 screw 2 Ø20 steel washers 1 Ø16 rubber washer 1 Ø12 x 40 cap nut *Cap nut inserted into a through-hole, max. Ø 17, made in the leaf.* 2 Ø 5 x 16 pins inserted into the plywood *Pins installed in blockouts of Ø 6 x 5 max.*		
Hot protection *Cap nut of the plywood*	FLEXILODICE TUBE	Graphite intumescent seal	$Ø_{Ext}$ 13 | $Ø_{Int}$ 9 Length: 39 *Split and open to allow the barrel to pass*	ODICE	
C5S11 suction cup					

Déborah ADLER
Traductrice-interprète
Experte près la Cour d'appel de Lyon
Français-Anglais-Italien
deborah.adler@orange.fr

CSTB
le futur en construction

Laboratory assessment No. DSSF21-07935/B

DESIGNATION	REFERENCE	MATERIALS	CHARACTERISTICS	SUPPLIER	Test
Suction cup	C5S11	Aluminium Alloy PVC	Dimensions of the suction cup: 266 x 66 x 40 (L x h x th) Fastening of the suction cup: 2 M6 x 30 screws *Fastened to the assembly plate*	CDVI	
Assembly plate		Aluminium	Dimensions of the support plate: 265 x 40 x 6 (L x W x th) Fastening of the assembly plate: 6 Ø 4 x 30 screws		
Plywood		Steel	Dimensions of the plywood: 185 x 60 x 12 (L x h x th) Fastening of the plywood: 1 M8 x 35 screw 2 Ø20 steel washers 1 Ø16 rubber washer 1 Ø12 x 40 cap nut *Cap nut inserted into a through-hole, max. Ø 17, made in the leaf.* 2 Ø 5 x 16 pins inserted into the plywood *Pins installed in blockouts of Ø 6 x 5 max.*		
Hot protection *Cap nut of the plywood*	FLEXILODICE TUBE	Graphite intumescent seal	$Ø_{Ext}$ 13 | $Ø_{Int}$ 9 Length: 39 *Split and open to allow the barrel to pass*	ODICE	
☛ Fastening accessory for plywood (For an assembly on the side opposite the opening of the door unit) *The plywood is fastened on the side of the leaf using the support plate.*					
AMA3 support plate					
Plywood support plate	AMA3	Aluminium	Dimensions of the support plate: 188 x 54.5 x 15 (L x W x th) Mounting: 6 Ø 4 x 30 screws	CDVI	
Hot protection *Plywood support plate*	Interdens Type 15	Ammonium phosphate intumescent seal	Dimensions of the plate: 188 x 54.5 x 1 (L x W x th)	ODICE	

Déborah ADLER
Technicien Intermède
Expert [illegible] Lyon
France – [illegible] – Italien
deborah.adler@orange.fr

CSTB
le futur en construction

Laboratory assessment No. DSSF21-07935/B

DESIGNATION	REFERENCE	MATERIALS	CHARACTERISTICS	SUPPLIER	Test
AMA5 support plate					
Plywood support plate	AMA5	Aluminium	Dimensions of the support plate: 197 x 72 x 15 (L x W x th) Mounting: 6 Ø 4 x 30 screws	CDVI	
Hot protection *Plywood support plate*	Interdens Type 15	Ammonium phosphate intumescent seal	Dimensions of the plate: 197 x 72 x 1 (L x W x th)	ODICE	
☛ Assembly accessory for suction cup (For an assembly protruding on the opening side of the door unit) *La suction cup is fastened to the frame and the plywood is fastened to the leaf on the opening side of the door unit, on a "Z" bracket.*					
Fastening of the electromagnetic suction cup					
"L" bracket	L3L4	Aluminium	50 x 30 "L" profile Profile length: 248 Profile thickness: 5.5 Profile section mounting: 3 Ø 4 x 25 screws	CDVI	
"L" bracket	L5	Aluminium	75.5 x 37.5 "L" profile Profile length: 266 Profile thickness: 5.5 Profile section mounting: 5 screws, Ø 4 x 30 min.	CDVI	
Fastening of the plywood					
"Z" bracket	Z3Z4Z5 F0516000002	Aluminium	Comprised of two "L" profiles - **Profile 1**: 50 x 50 - **Profile 2**: 50 x 50 Profile length: 185 Profile thickness: 5.5 Assembly of the profiles: 2 M5 x 12 screws Profile section mounting: 5 Ø 4 x 30 screws	CDVI	
Hot protection *Z3Z4Z5 bracket*	Interdens Type 15	Ammonium phosphate intumescent seal	Dimensions of the plate: 185 x 50 x 1 (L x W x th)	ODICE	

Déborah ADLER
Traductrice Interprète
Expertise pénale Cour d'appel de Lyon
Français – Anglais – Italien
deborah.adler@orange.fr

CSTB
le futur en construction

Laboratory assessment No. DSSF21-07935/B

DESIGNATION	REFERENCE	MATERIALS	CHARACTERISTICS	SUPPLIER	Test
"Z" bracket	LZ 180	Aluminium	Comprised of a **Z** bracket and an **L** bracket "**Z**" bracket Comprised of two "L" profiles - **Profile 1**: 38 x 38 - **Profile 2**: 38 x 38 Profile length: 166 Profile thickness: 6 Assembly of the profiles: 2 M5 x 12 screws Profile section mounting: 5 Ø 4 x 30 screws "**L**" bracket 42 x 30 "L" profile Profile length: 166 Profile thickness: 5 Profile section mounting: 3 Ø 4 x 25 screws	CDVI	
Hot protection *LZ180 bracket*	Interdens Type 15	Ammonium phosphate intumescent seal	Dimensions of the plate: 166 x 42 x 1 (L x W x th)	ODICE	
"Z" bracket	300 ZL	Aluminium	Comprised of a **Z3Z4Z5** bracket and an **L3L4** bracket **Z3Z4Z5** bracket: Comprised of two "L" profiles - **Profile 1**: 50 x 50 - **Profile 2**: 50 x 50 Profile length: 185 Profile thickness: 5.5 Assembly of the profiles: 2 M5 x 12 screws Profile section mounting: 5 Ø 4 x 30 screws **L3L4** bracket: 50 x 30 "L" profile Profile length: 248 Profile thickness: 5.5 Profile section mounting: 3 Ø 4 x 25 screws	CDVI	
Hot protection *300ZL* bracket	Interdens Type 15	Ammonium phosphate intumescent seal	Dimensions of the plate: 185 x 50 x 1 (L x W x th)	ODICE	

Déborah ADLER
Traductrice Interprète
Expertise c... Rhône-Alpes
Français - Anglais - Italien
deborah.adler@orange.fr

DESIGNATION	REFERENCE	MATERIALS	CHARACTERISTICS	SUPPLIER	Test
"Z" bracket	500 ZL	Aluminium	Comprised of a **Z3Z4Z5** bracket and an **L** bracket **Z3Z4Z5** bracket: Comprised of two "L" profiles - **Profile 1**: 50 x 50 - **Profile 2**: 50 x 50 Profile length: 185 Profile thickness: 5.5 Assembly of the profiles: 2 M5 x 12 screws Profile section mounting: 5 Ø 4 x 30 screws **L5** bracket: 75.5 x 37.5 "L" profile Profile length: 266 Profile thickness: 5.5 Profile section mounting: 5 screws, Ø 4 x 30 minimum	CDVI	
Hot protection *500ZL bracket*	Interdens Type 15	Ammonium phosphate intumescent seal	Dimensions of the plate: 185 x 50 x 1 (L x W x th)	ODICE	

Déborah ADLER
Traductrice-Interprète
Experte près la Cour d'Appel de Lyon
Français-Portugais – Italien
deborah.adler@orange.fr

1.1.2 Description & Implementation of the hardware elements.

Recall that the all-inclusive results described in § 3 can be applied only to wooden door units with a fire-resistant leaf in true scale in accordance with EN1634-1, coming from a method and construction similar to those submitted for testing.

The hardware elements and their accessories for implementing them can be fitted ***only*** on wooden door units that have an **EI30** fire resistance classification report (Fire direction indifferent).

1.1.2.1 Implementation of ball contacts

Ball contact with references **BALLCONTACT** and **RB34C** from *CDVI* can be used in the jamb on the articulation side of the frame with suitable machining. They are fastened using 2 Ø 3.5 x 20 screws.

1.1.2.2 Implementation of electromagnetic suction cups

Each side of the door unit can be fitted with an electromagnetic suction cup combined with plywood used on the opposite side.

☛ **Case of assembly of the suction cup on the side opposite the opening of the door unit**

The suction cup is fastened as an overlay on the upper crosspiece of the frame using an aluminium assembly plate. The latter is screwed on the inside face of the crosspiece using Ø 4 x 30 screws. The assembly of the suction cup on the assembly plate is done with 2 screws.

The associated plywood can be fastened as an overlay on the leaf:

- Using an aluminium support plate with reference **AMA3** or **AMA5** from *CDVI*. The latter is screwed on the side opposite the opening of the door unit using 6 Ø 4 x 30 screws. The assembly of the plywood on the support plate is done with a unit comprised of an M8 x 15 screw, two Ø 20 steel washers and a

Ø 16 rubber washer. Two pins Ø 5 x 16, inserted in the plywood, ensure proper alignment of the latter with respect to the support. They are positioned beforehand in the Ø 6 x 5 holes (Ø x h).
The hot protection for this unit is provided by using an intumescent plate with reference **Interdens Type 15** from *ODICE* and sandwiched between the leaf and the support plate.

Or

- The associated plywood is fastened as an overlay on the leaf with a unit comprised of an M8 x 25 screw, two Ø 20 steel washers, a Ø 16 rubber washer and a Ø 12 x 40 cap nut. The latter is implemented through a through-hole, max. Ø 17, made on the leaf. Two pins Ø 5 x 16, inserted in the plywood, ensure proper alignment of the latter with respect to the support. They are positioned beforehand in the Ø 6 x 5 holes (Ø x h). The hot protection of the cap nut is provided by using a **FLEXILODICE TUBE** tubular intumescent seal from *ODICE*. The latter is cut along its length and partially covers the perimeter of the cap nut.

NOTE: *In this implementation configuration, the suction cup obstructs the free passage of the door unit.*

☛ **Case of assembly of the suction cup on the opening side of the door unit**

The suction cup is fastened as an overlay on the upper crosspiece of the frame using an aluminium fastening bracket with reference **L3L4** or **L5** from *CDVI*. The latter is screwed on the upper crosspiece of the frame using 3 or 5 min. Ø 4 x 25 screws. The suction cup is assembled on the bracket using two suitable screws.

The associated plywood is fastened as an overlay on the leaf using an aluminium fastening bracket with reference **Z3Z4Z5** or **300 ZL** or **500 ZL** from *CDVI*. The latter is screwed on the side opposite the opening of the door unit using 5 Ø 4 x 25 screws min. The assembly of the plywood on the bracket is done with a unit comprised of an M8 x 25 screw, two Ø 20 steel washers and a Ø 16 rubber washer. Two pins Ø 5 x 16, inserted in the plywood, ensure proper alignment of the latter with respect to the bracket. They are positioned beforehand in the blockouts provided for this purpose in the bracket.

The hot protection for the bracket is provided by using an intumescent plate with reference **Interdens Type 15** from *ODICE* sandwiched between the leaf and the bracket.

2 Reasoning

2.1 Pressure condition and validity of the results

Note that during the reference test DSSF21-03605, the CDVI hardware elements were tested on full-size door units and subjected to heating and pressure conditions in accordance with standard EN 1634-1 + A1:2018-03.

In light of the normative requirements regarding the heating and pressure conditions specified respectively in § 4.2 and in § 4.3 of EN 1634-2:2010-05, we observe that the latter are identical to those of standard EN 1634-1 + A1:2018-03.

Pressure condition:

Pressure at the top of the door unit (NF EN 1634-1)	⇨	P = (H - 500) x 8.5 = **13.5 [Pa]**
Pressure upright of the article (NF EN 1634-2)	⇨	P = 8.5a – 4.25 = **13.5 [Pa]**

With H = the overall height of the door unit in metres

a = the height of the centre of the article above the theoretical floor level in metres.

Therefore, the test results pronounced in report DSSF21-03605 as well as the direct scope of application of the results described in § 14 of NF EN 1634-2:2010-05 apply.

Déborah ADLER
Traductrice – Interprète
Experte près la Cour d'appel de Lyon
Français – Anglais – Italien
deborah.adler@orange.fr

2.2 References and range of the hardware elements.

In light of the technical sheets of the hardware elements presented at the reference test DSSF21-03605, we observe that each reference tested is an integral part of a range of products.

In addition, we observe that the hardware elements tested during this reference test are dimensionally representative for each range concerned by this study. The hardware elements tested are also the elements with the highest impact on the thermomechanical behaviour in a fire situation of a door unit.

Consequently, it is allowed that the test results pronounced in report DSSF21-03605 be varied on an all-inclusive basis to the products of the ranges listed in § 1 hereinabove.

3 All-inclusive results of the study according to standard EN 1634-2

Recall that the results must be applied only to door units coming from a method and construction similar to those submitted for testing in true scale in accordance with EN 1634-1, and to those for which it has been demonstrated that the deformation characteristics are within the direct scope of application, where applicable.

3.1.1 All-inclusive results for a door unit equipped with a **BALLCONTACT** position contact

All-inclusive results		
Integrity under fire effects	**Results**	
- Sustained ignition at	30 minutes without failure	
- Ignition of the cotton pad at	30 minutes without failure	
- Penetration of an opening gauge at	30 minutes without failure	
Thermal insulation	**Results**	
	30 minutes without failure	
Equipped side	Indifferent	

3.1.2 All-inclusive results for a door unit equipped with a **RB34C** position contact

All-inclusive results		
Integrity under fire effects	**All-inclusive results**	
- Sustained ignition at	30 minutes without failure	
- Ignition of the cotton pad at	20 minutes without failure	
- Penetration of an opening gauge at	30 minutes without failure	
Thermal insulation	**Results**	
	20 minutes without failure	
Equipped side	Indifferent	

Déborah ADLER
Traductrice Interprète
Expertise
Français
Espagnol – Italien
deborah.adler@orange.fr

3.1.3 All-inclusive results for a door unit equipped with the **C3S11** electromagnetic suction cup

All-inclusive results		
Integrity under fire effects	**Results**	
- Sustained ignition at	30 minutes without failure	
- Ignition of the cotton pad at	20 minutes without failure	
- Penetration of an opening gauge at	30 minutes without failure	
Thermal insulation	**Results**	
	20 minutes without failure	
Equipped side	Indifferent	

3.1.4 All-inclusive results for a door unit equipped with the **C5S11** electromagnetic suction cup

All-inclusive results		
Integrity under fire effects	**Results**	
- Sustained ignition at	30 minutes without failure	
- Ignition of the cotton pad at	20 minutes without failure	
- Penetration of an opening gauge at	30 minutes without failure	
Thermal insulation	**Results**	
	20 minutes without failure	
Equipped side	Indifferent	

3.2 Justification of the laboratory assessment

The fire resistance times obtained at the end of the reference tests (Cf. § hereinbelow) as well as the adjustments and constructive modifications mentioned in § 1.1 make it possible to take account of the all-inclusive results set forth in § 3 of this laboratory assessment

REPORTS		"E" criteria			"I" criteria		Fire direction		Test standard
REPORT NO.	Index	Sustained ignition	Cotton pad	Penetration or Gauge	Criterion I_1	Criterion I_2	CP	OP	
☛ **DSSF21-03605** **Door unit equipped with the V3SR suction cup & RB34C position contact**	-	33	20	36	20	20	CP	-	EN 1634-1
☛ **DSSF21-03605** **Door unit equipped with the V5SR suction cup & BALLCONTACT position contact**	-	32	36	36	32	32	CP	-	EN 1634-1

Key: CP: Hinge side | OP: Side opposite the hinges

Déborah ADLER
Traductrice – Interprète
Expert près la Cour d'appel de Lyon
Anglais – Italien
deborah.adler@orange.fr

Annexes: Drawings

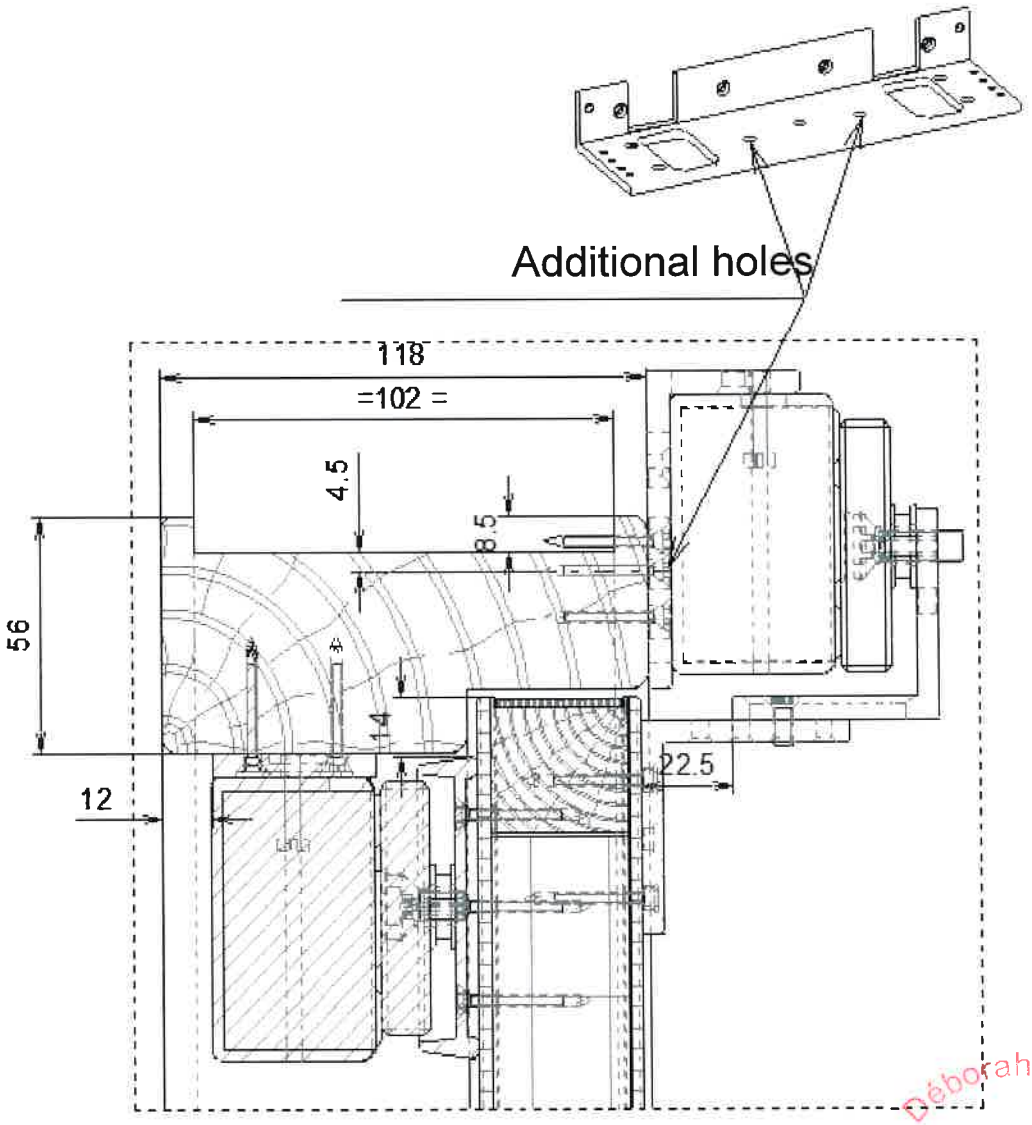

Overview of the implementation of hardware elements with the **AMA3** or **AMA5** support plate

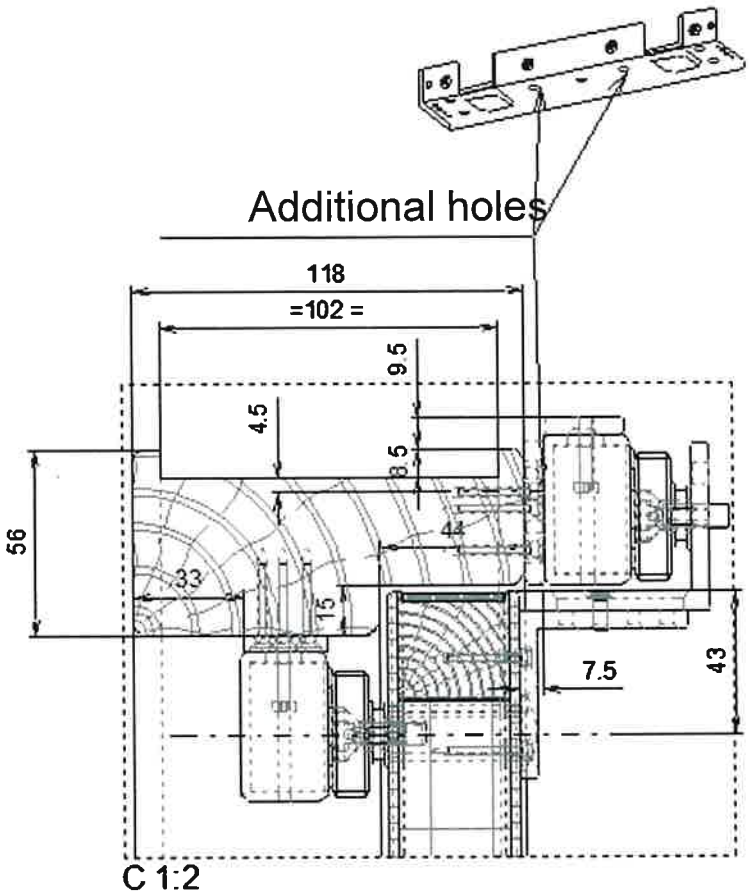

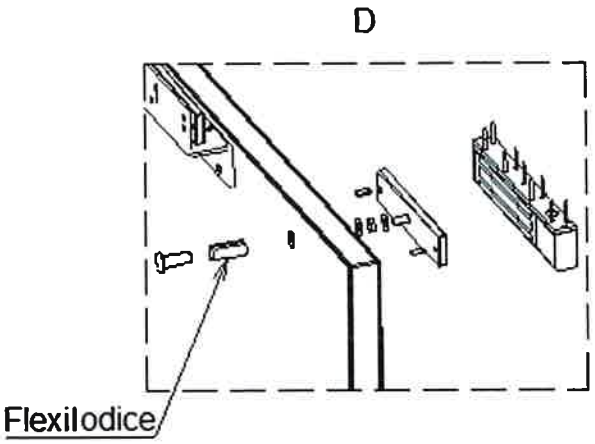

Déborah ADLER
Traductrice Interprète
Experte
Traduction Anglais – Italien
deborah.adler@orange.fr

Overview of the implementation of hardware elements without the **AMA3** or **AMA5** support plate

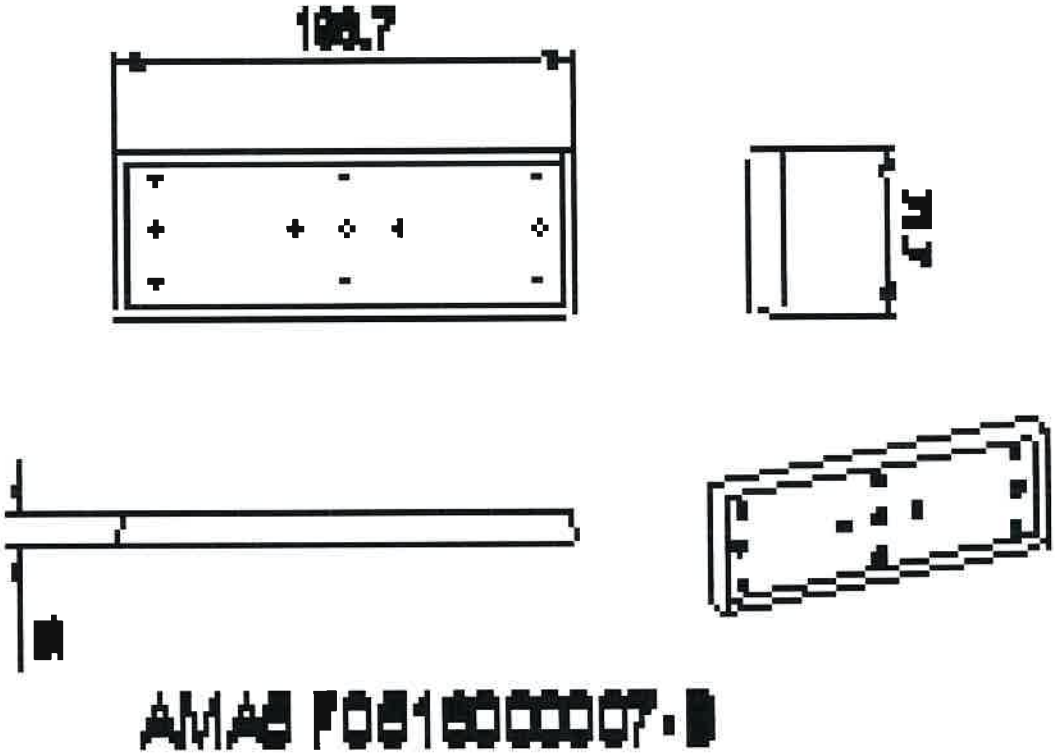

Déborah ADLER
Traductrice Interprète
Experte près la Cour d'Appel de Lyon
Français - Allemand - Italien
deborah.adler@orange.fr

Overview of the **AMA5** plate

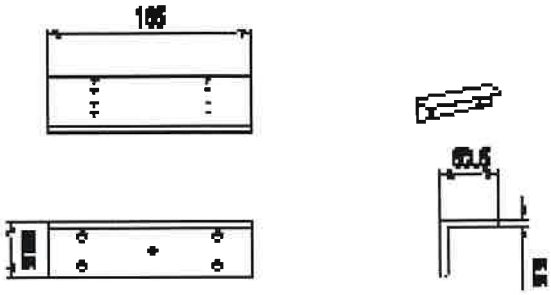

Z3Z4Z5 F0516000002 bracket

Profile 1

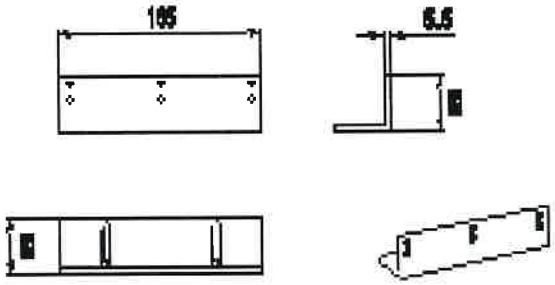

Z3Z4Z5 F0516000002 bracket

Profile 2

Overview of the elements comprising the **Z3Z4Z5** bracket

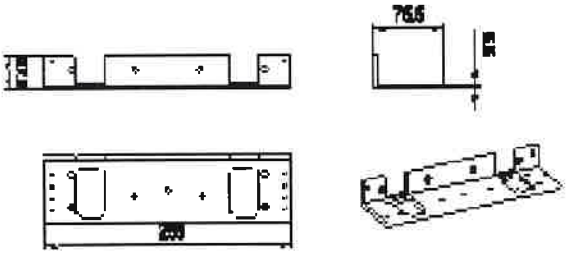

L5 F0516000004

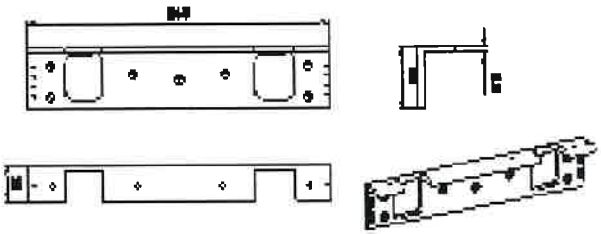

L3L4 F0516000003 fastening plate

Overview of brackets **L5** and **L3L4**

Déborah ADLER
Traductrice Interprète
Experte près la Cour d'appel de Lyon
Français – Anglais – Italien
deborah.adler@orange.fr

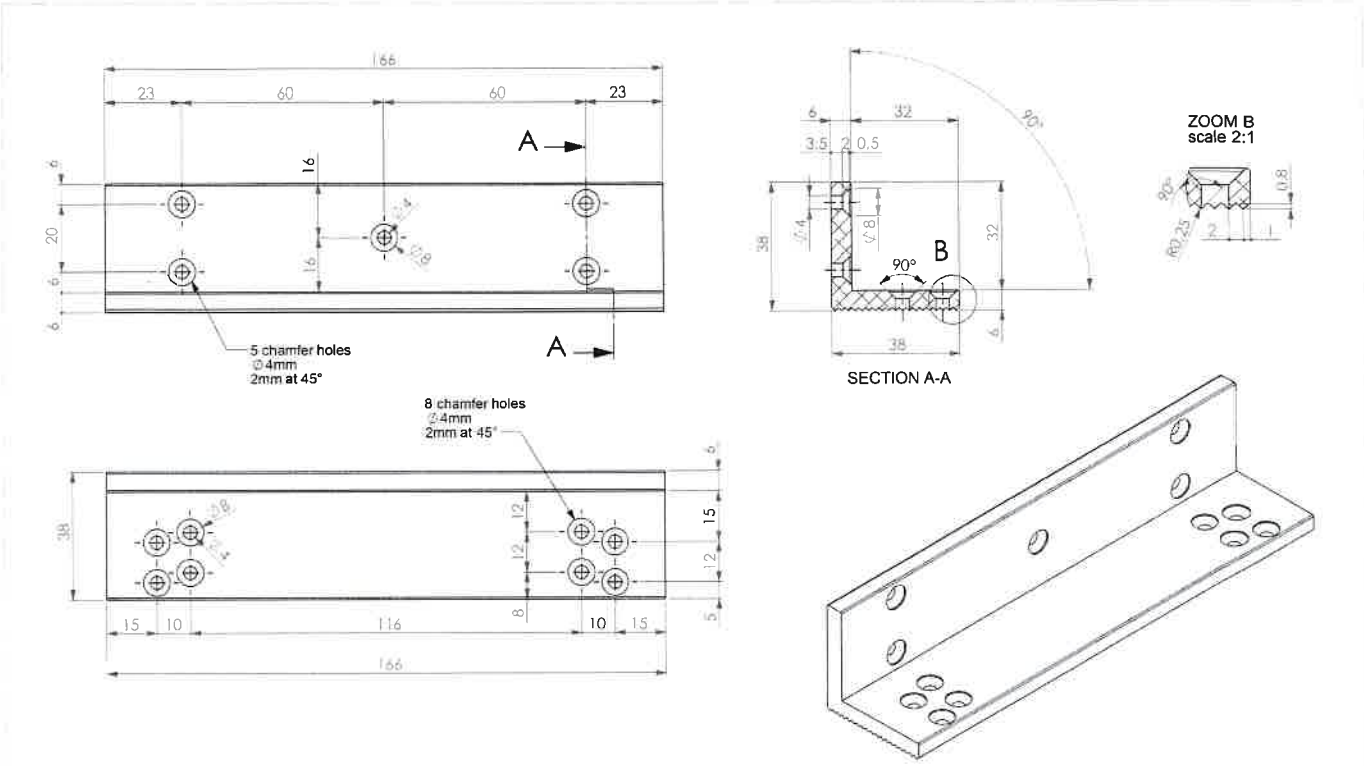

Profile 1

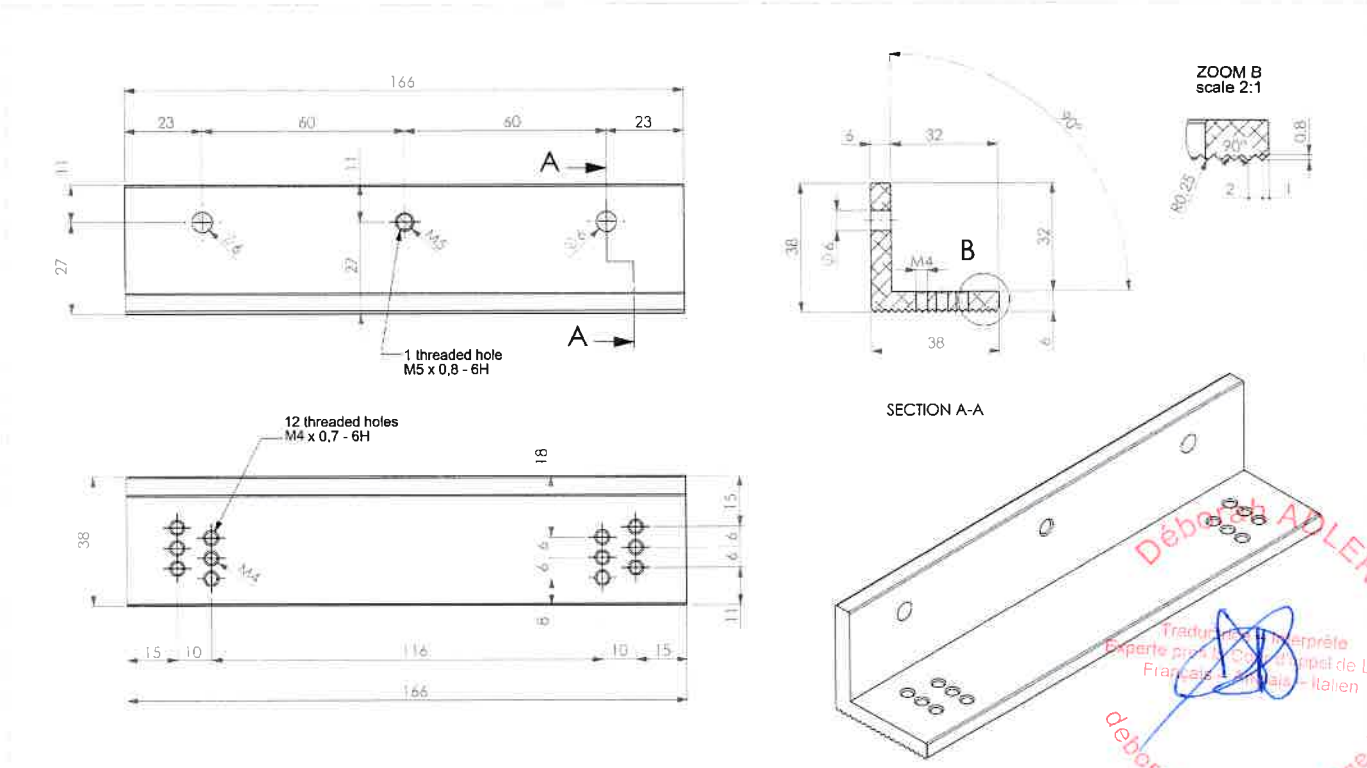

Profile 2

Detailed drawing of the elements comprising the **Z** bracket of the **"LZ180"** fastening unit

Déborah ADLER
Traductrice Interprète
Experte près la Cour d'Appel de Lyon
Français - Anglais - Italien
deborah.adler@orange.fr

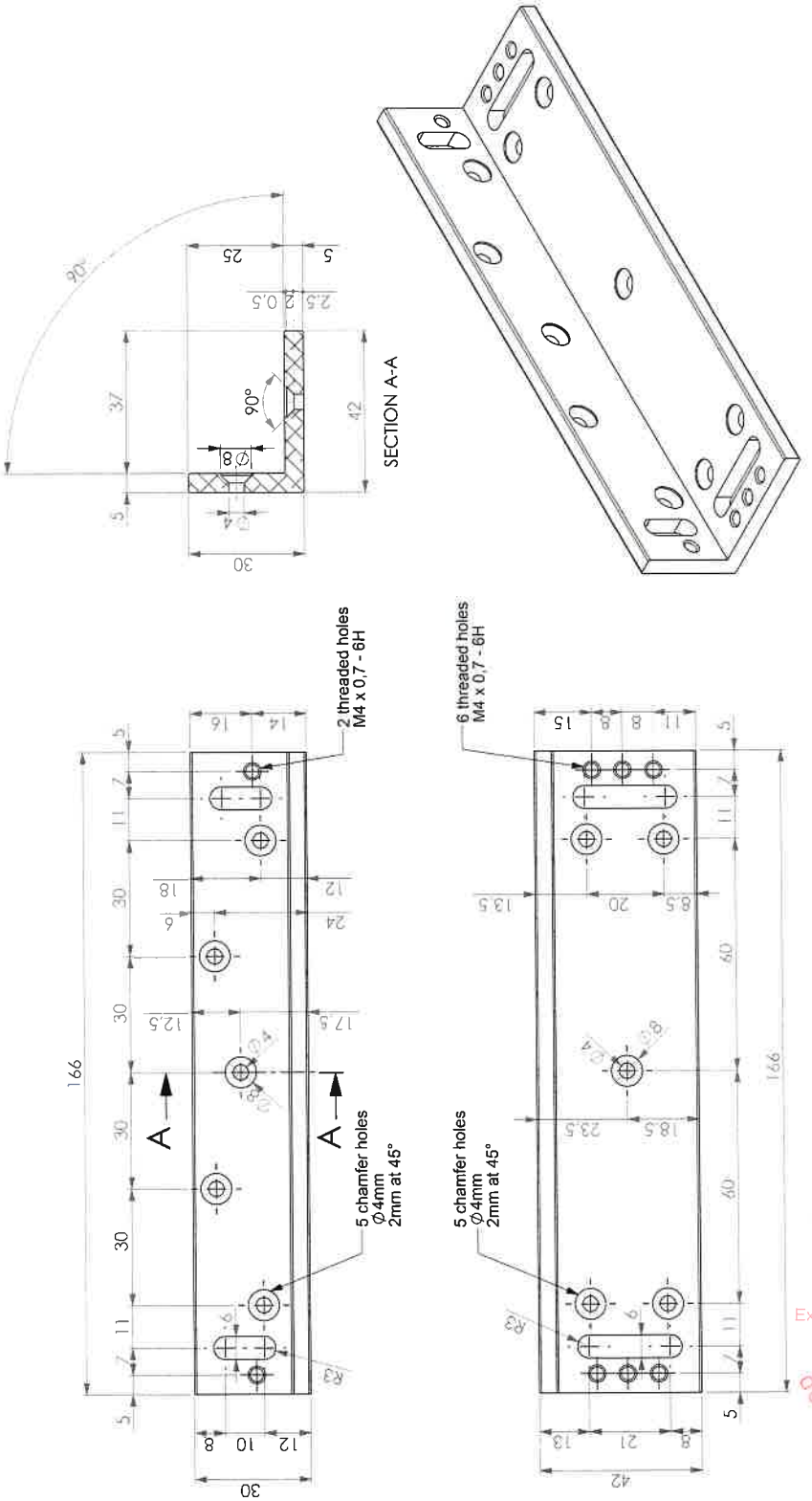

Detailed drawing of the elements comprising the **L** bracket of the **"LZ180"** fastening unit

Déborah ADLER
Traductrice Interprète
Experte auprès de la Cour d'appel de Lyon
Français – Anglais – Italien
deborah.adler@orange.fr

Laboratory assessment No. DSSF21-07935/B

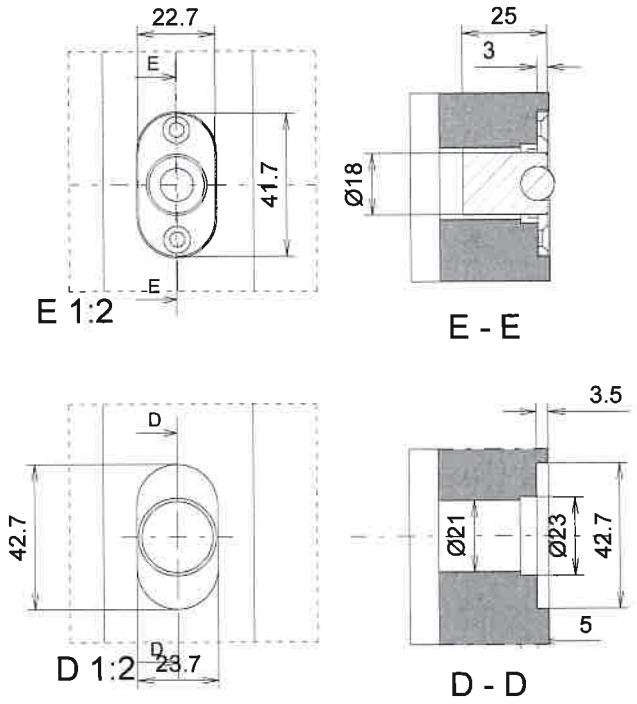

Mortising of the ***Ballcontact*** ball contact

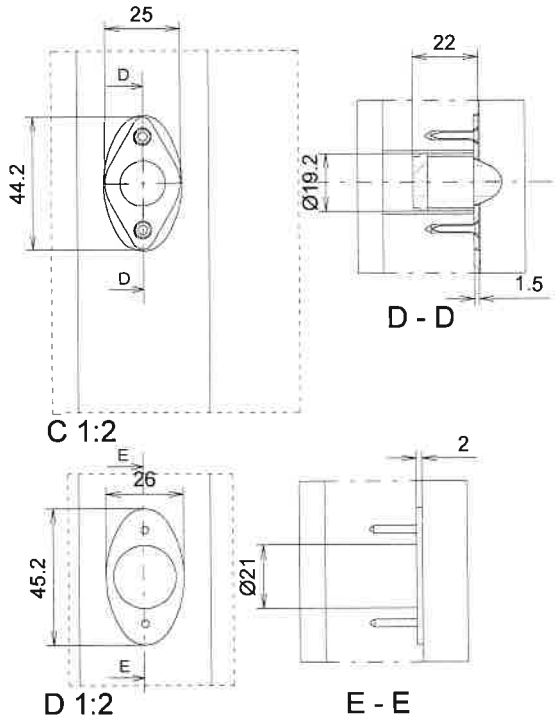

Mortising of the ***RB34C*** ball contact

I, the undersigned, Déborah ADLER, sworn translator at the Court of Appeal of Lyon, certify that this translation is true to the original in French.
Ne varietur No. 2023-137-b
Drawn up in Meyzieu on 11/09/2023
Translation of 18 pages.
Delivered in 1 copy.

Déborah ADLER
Traductrice-Interprète
Experte près la Cour d'appel de Lyon
Français – Anglais – Italien
deborah.adler@orange.fr

End of laboratory assessment